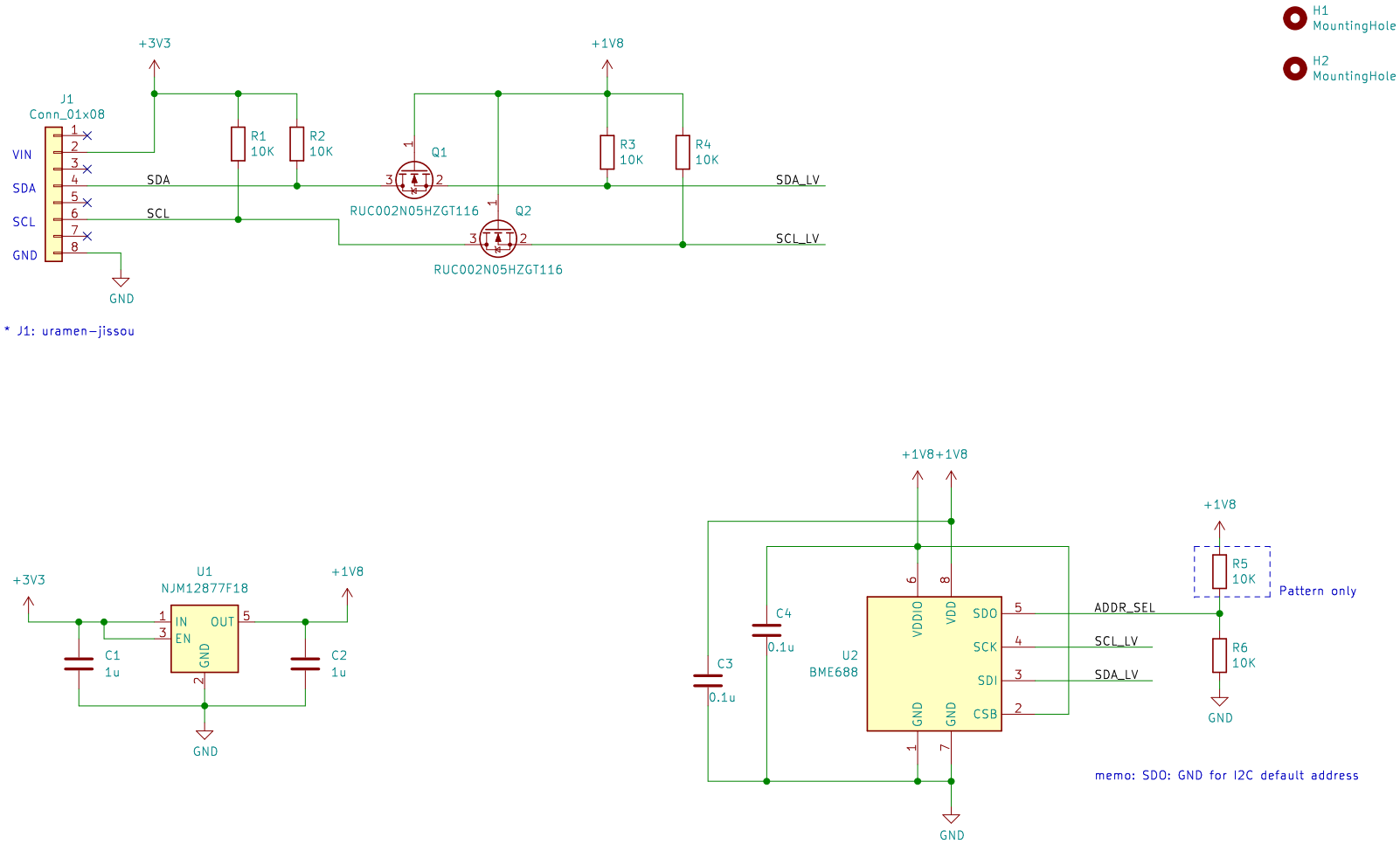

MK Tech Lab

Sheet: /

File: KE006.kicad_sch

Title: Air Quality Sensor Board (BME688)

Size: A4	Date: 2022-07-18	**Rev: v1.0**
KiCad E.D.A. eeschema (6.0.5)		Id: 1/1